PLEASANTON AUTO MALL

Hendrick AUTOMOTIVE GROUP

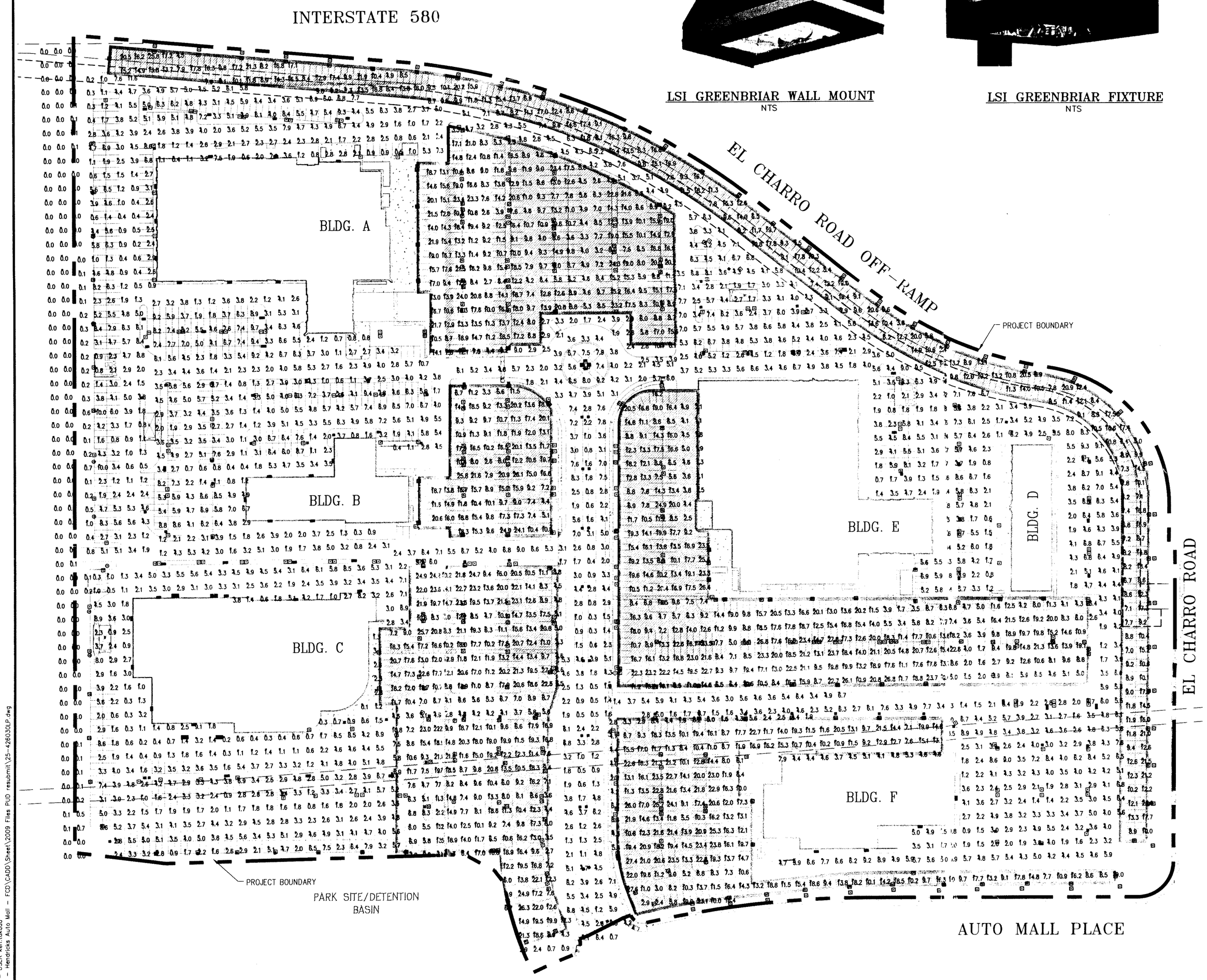

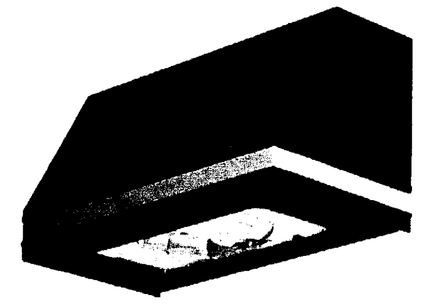

LSI GREENBRIAR WALL MOUNT
NTS

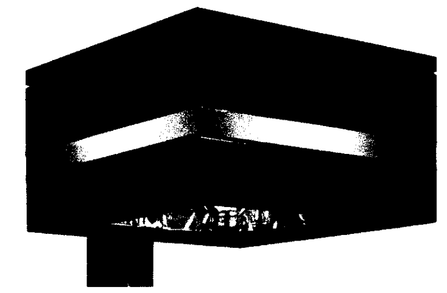

LSI GREENBRIAR FIXTURE
NTS

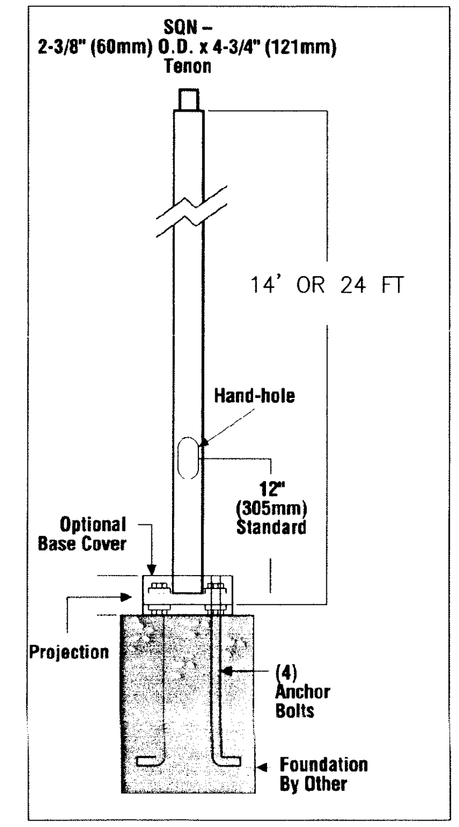

LIGHT POLE DETAIL
NTS

LEGEND

- SINGLE HEAD GREENBRIAR LIGHT FIXTURE
- D90° HEAD GREENBRIAR LIGHT FIXTURE
- D180° HEAD GREENBRIAR LIGHT FIXTURE
- LSI GREENBRIAR 250W METAL HALIDE – 14 FOOT POLE
- LSI GREENBRIAR 400W METAL HALIDE – 25 FOOT POLE
- LSI GREENBRIAR 1000W METAL HALIDE – 25 FOOT POLE
- LSI GREENBRIAR 175W METAL HALIDE – 14 FOOT WALL MOUNT
- DISPLAY AREA

LOCATION	ILLUMINANCE VALUES (FC) AVERAGE	MAXIMUM
DISPLAY AREA	13	28
NON-PARKING AREA	3.5	10

CHOATE CONSTRUCTION

Kimley-Horn and Associates, Inc.

RED

PRELIMINARY LIGHTING ANALYSIS EXHIBIT

RECEIVED
FEB 2 2009
CITY OF PLEASANTON
PLANNING DIVISION

0 40' 80' 160' 320'

N

DATE: JANUARY 2009
REVISIONS:

Jan 28, 2009 - 3:32pm - USER ken.lokoto
K:\KA_LIEV\093426100 - Hendrick Auto Mall - FED\CADD\Sheet\2009 Files PUD resubmit\25-426030-P.dwg